Art.-Number: 701724

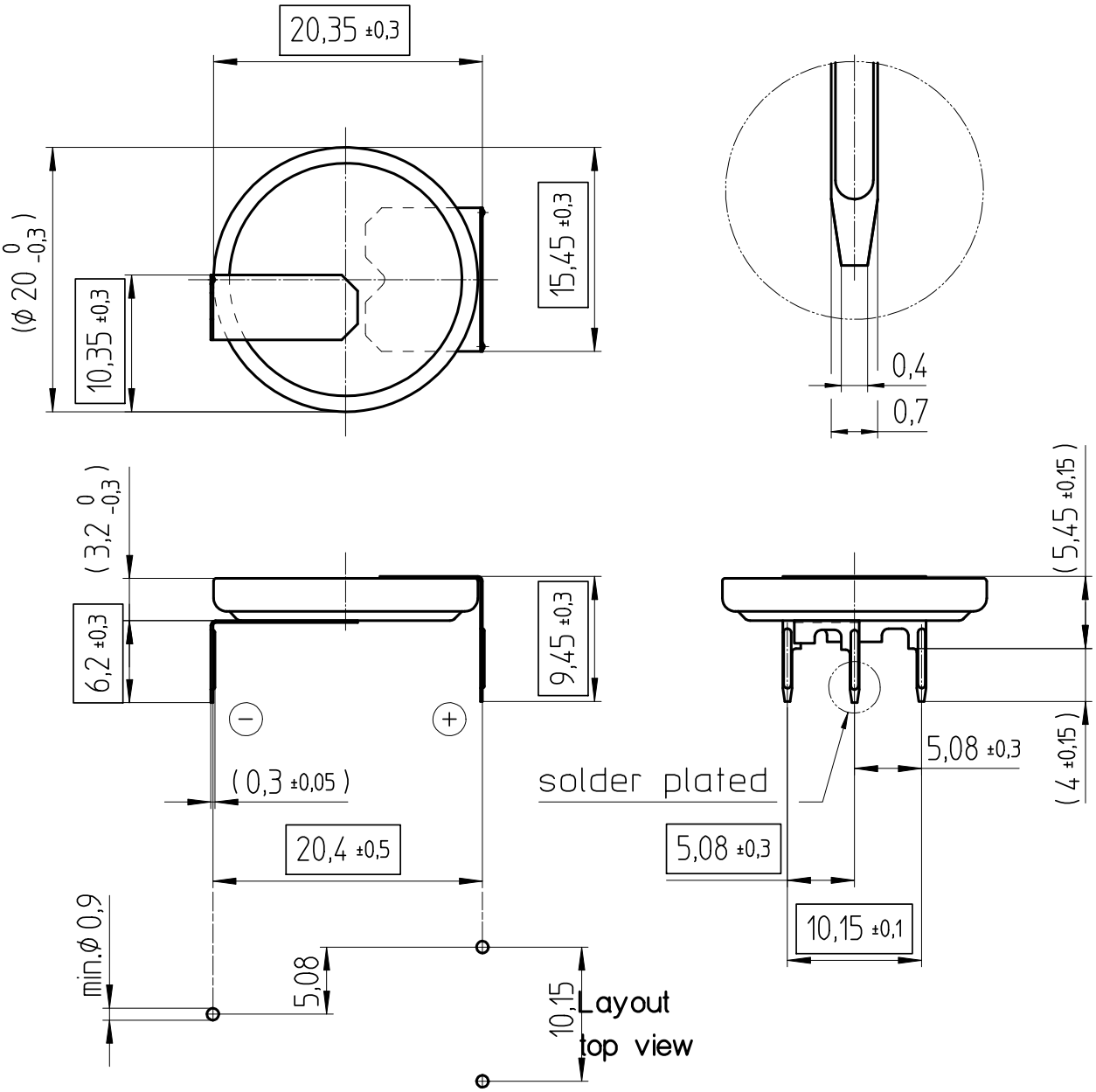

Tab material: Stainless steel

- Samples can deviate in the execution from the serie.

- Dimensions and tolerances can be specified only after the testing of the devices for the mass production definitely

All framed values will be used for dimension checking !

The Products of Renata SA are neither designed nor authorized for use in certain areas of appliction of environment.
For further details we refer to our webpage: www.renata.com/downloads/restriction_of_use

Rev.	1	13.09.2019	SRi	Rev.	⊙	.	.		Customer's Approval		
Rev.	⊙	.	.	Rev.	⊙	.	.		Date		
Rev.	⊙	.	.	Rev.	⊙	.	.		Signature		

Titel: CR2032 MFR RH2	Scale 2:1	Drawn	24.11.06	SRi
		Checked	13.09.19	HSn
		Approved	16.09.19	MDi

renata batteries

CH-4452 Itingen
Switzerland

3.9163.4-1